12ft X 16ft Attached Breeze Pergola
Assembly Manual
(For Both 9' and 12' High Posts)

Outdoor Living Today

Feb 5th, 2011
Revision #4

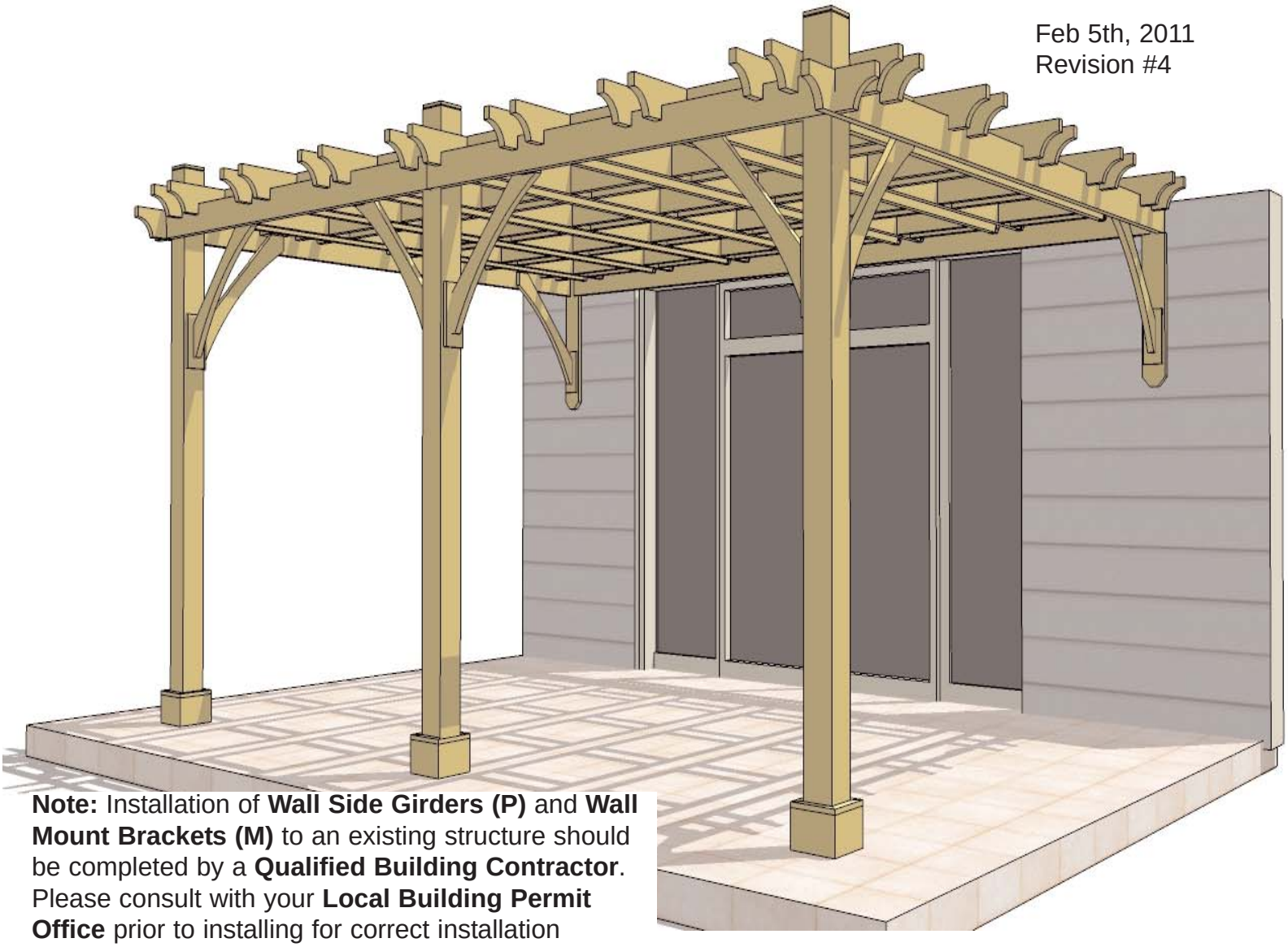

Note: Installation of **Wall Side Girders (P)** and **Wall Mount Brackets (M)** to an existing structure should be completed by a **Qualified Building Contractor**. Please consult with your **Local Building Permit Office** prior to installing for correct installation guidelines and procedures. Post Mounting Hardware is **NOT** included in this kit. Confirm with your Local Building Permit Office to determine the correct Post Mount Hardware in your area.

Important - If you receive a broken or missing part. Please contact our Customer Service Center immediately @ 1-888-658-1658 for assistance.

Important - Western Red Cedar Lumber will have surface splitting that occurs as lumber seasons and drys to the moisture content in your area. Splitting or "checking", as it is referred to, can be 1/8" to 1/4" wide and can run several feet. This does not diminish the structural integrity of the material in any way.

Customers agree to hold Outdoor Living Today and any Authorized Dealers free of any liability for improper installation, maintenance and repair of any Outdoor Living Today products.

12X16 ATTACHED BREEZE PERGOLA

Important - Western Red Cedar Lumber will have surface splitting that occurs as lumber seasons and drys to the moisture content in your area. Splitting or "checking", as it is referred to, can be 1/8" to 1/4" wide and can run several feet. This does not diminish the structural integrity of the material in any way.

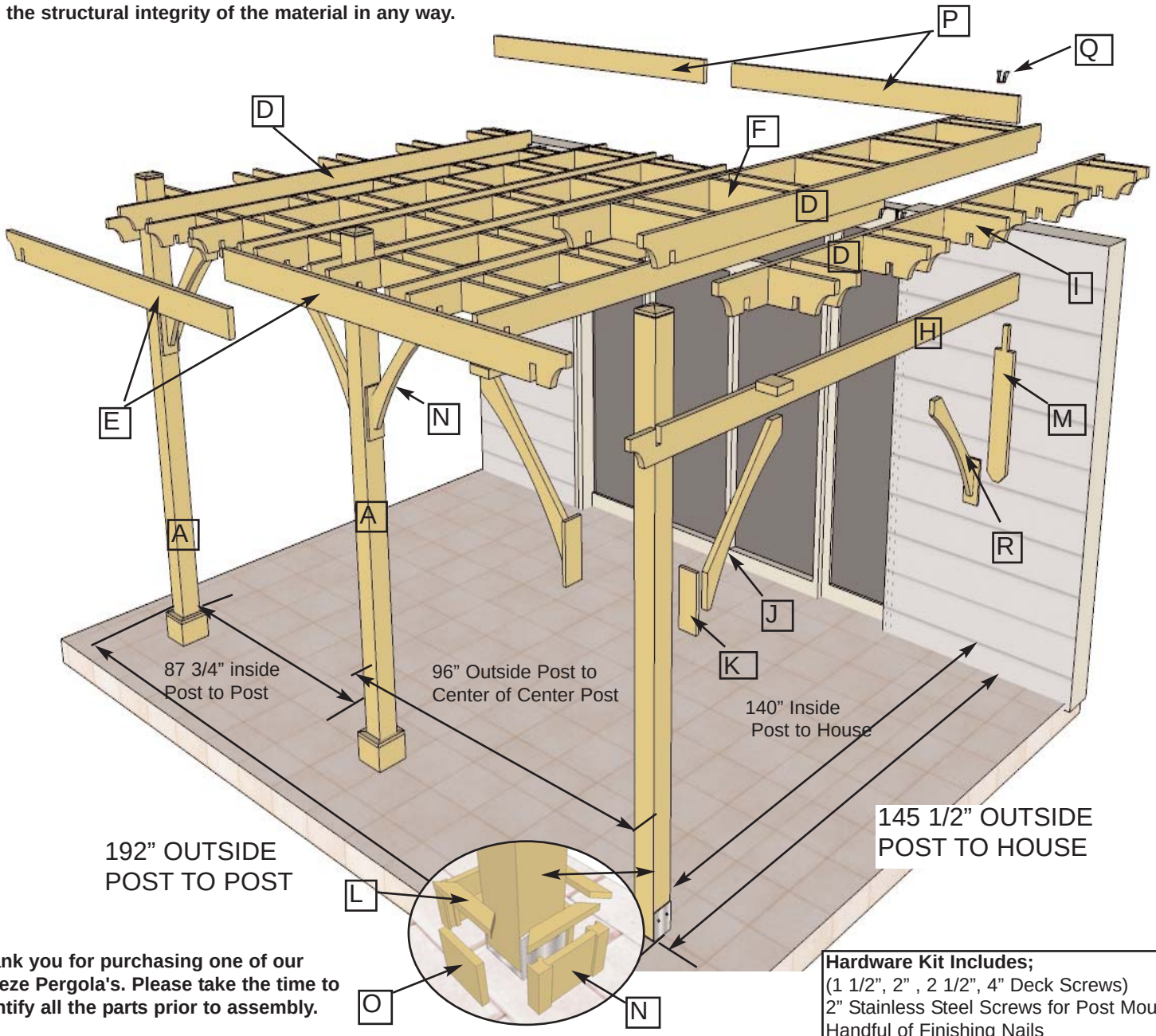

Thank you for purchasing one of our Breeze Pergola's. Please take the time to identify all the parts prior to assembly.

Parts Lists:

Part	T	Finished Size W	L	Qty.
A - Posts	5 1/2"	5 3/8"	108"or 144"	3
D - Main Joists (shallow notch on bottom)	1 1/2"	5 1/2"	154 1/2"	14
E - Front Girders (deep notch - bottom)	1 1/2"	5 1/2"	105"	2
F - Blocking	1 1/2"	5 1/2"	20 1/4"	60
H - Side Girders (deep notch- top)	1 1/2"	5 1/2"	154 1/2"	2
I - Stub Joists	1 1/2"	5 1/2"	14 1/2"	20
J - Left & Right Corner Brackets(Spacer)	1 1/2"	5 1/2"	34 3/4"	6
K - Corner Bracket Post Mounts	3/4"	4 1/2"	10 1/2"	8
L - Post Skirting Caps	3/4"	8 3/8"	1 1/2"	12
M - Wall Mount Brackets	1 1/2"	5 1/2"	48"	2
N - Post Skirting - Slotted	1 1/2"	8 3/8"	5 3/8"	6
O - Post Skirting	3/4"	5 7/8"	5 3/8"	6
P - Wall Side Girders (sq. cut both ends)	1 1/2"	5 1/2"	94 1/2"	2
Q - Joist Mount Bracket	14 (Hardware)			
R - Corner Brackets(without Spacer)	1 1/2"	5 1/2"	34 3/4"	2

Hardware Kit Includes;
(1 1/2", 2" , 2 1/2", 4" Deck Screws)
2" Stainless Steel Screws for Post Mounts
Handful of Finishing Nails
3/8" Lag screws (3" and 4" long)
3/8" flat washes
8 - 1 1/2" long wooden Dowels

Tools Required:
Work Gloves,
Screw Gun with square drive bit
9/16" wrench
Level
2 Tall Step Ladders
Hammer

Assembly Time:
1 Day (does not include site preparation)

Specifications:
Outside Post to Wall Dimension:
192" wide x 145 1/2" deep x 110"h or 146"h
Including Overhand
210" wide x 154 1/2" deep x 110"h or 146"h

12x16 ATTACHED BREEZE HARDWARE PACKAGE

Hardware Kit (Provided)

Note: screws and nails shown actual size.

4”

1 1/4” Finishing

2 1/2”

Square Drive Bit

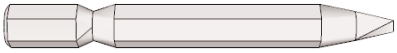

1 1/4”

Wooden Dowel (8)

2” Stainless

3” & 4” Lag Screw with Washers

Tools Required (Not Provided)

Hammer

Screw Gun/Drill

Tape Measure

Wood Clamp

9/16” Wrench

Level

Pliers

Ladders

1/8” & 1/4” Drill Bits

Safety Equipment Required (Not Provided)

Safety Glasses

Work Gloves

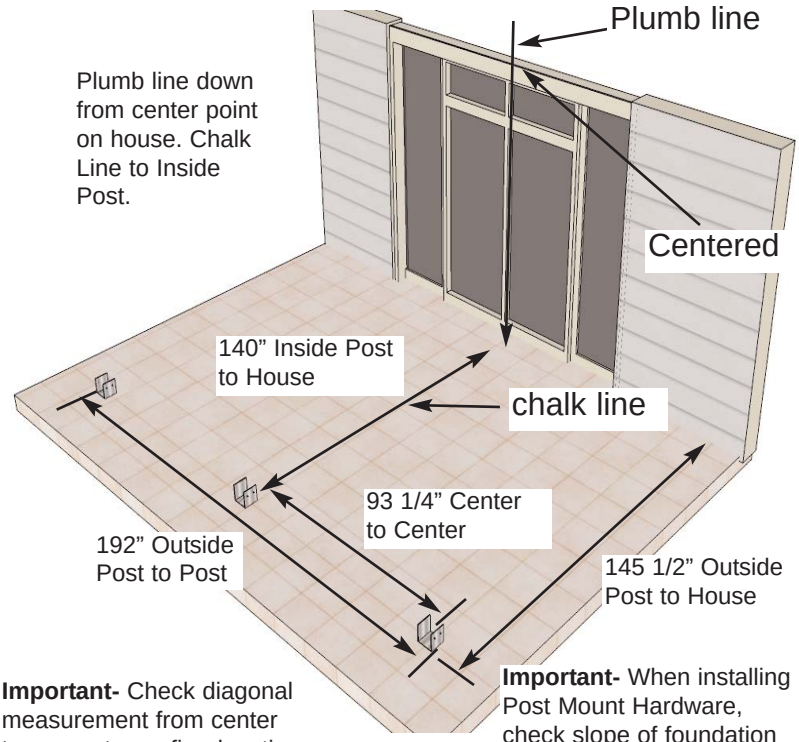

Important- Check diagonal measurement from center to corner to confirm location of Post Mount Hardware.

Important- When installing Post Mount Hardware, check slope of foundation and make necessary heights adjustments.

Laying out your Footprint

To determine the proper placement of your 5.5” x 5.5” Posts, first locate the center spot for your Pergola on the house. Drop a plumb line down and mark with a chalk line 140” perpendicular to house. This measurement will be the location for Inside of Center Post. Mark, and from the Center Post, measure and mark location for both Corner Posts. See Diagram to left and additional detail on **Page 2** to assist you. If you are having problems determining Post locations, please call our **Customer Care Line** for assistance before proceeding at **1-888-658-1658.** We recommend that you fix Posts to ground using Steel Post Bases or Saddle Brackets fixed on cement footing. If attaching Posts to pre-existing deck, we recommend that you purchase Post / Deck Mounting Brackets. In both cases, Post Mounting hardware can be found at most Hardware Stores.

94” from Foundation to bottom of Wall Side Girder. (P) for Standard 9’ tall Posts. Measure 12” higher for each additional 12” in post height. Example, for 12’ posts, measure 130” to bottom of Wall Side Girder and so on.

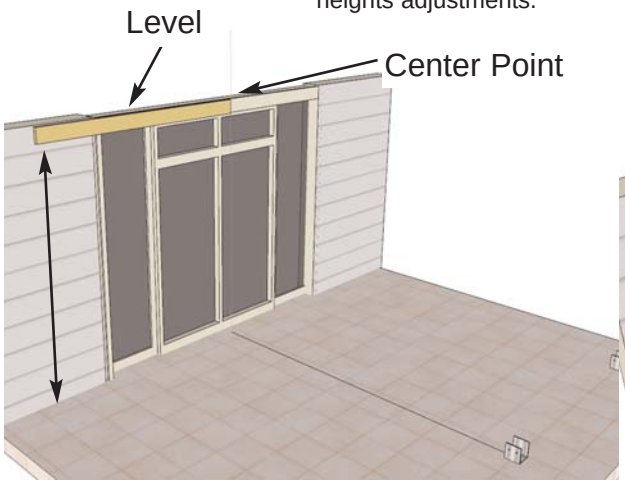

1. Locate and lift **Wall Side Girders (P)** up and place on previously marked center point on house. On Standard 9’ high Posts, measure 94” from Foundation to the bottom of **Wall Side Girder (P)**. Height of Wall Side Girder with non-standard posts heights will vary. Level and attach to Wall with supplied 4” Lag Bolts (8) screwing into vertical wall studs of house. **Important-** We recommend using the services of **Qualified Building Contractor** when securing Girder to House. Piece must be properly secured and caulked before proceeding.

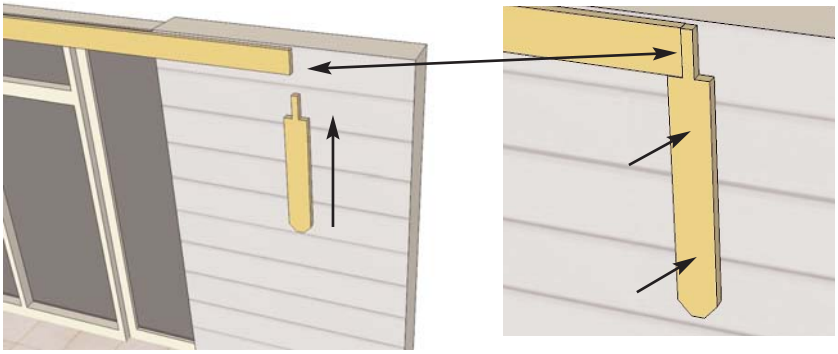

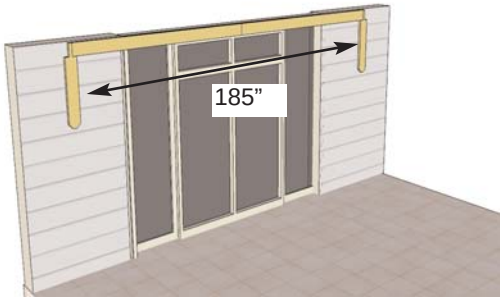

2. After Wall Side Girders are correctly secured, slide **Wall Mount Brackets (M)** up tight to girder. Secure bracket to house with 2 - 4” Lag Bolts per side. Have your **Qualified Contractor** complete.

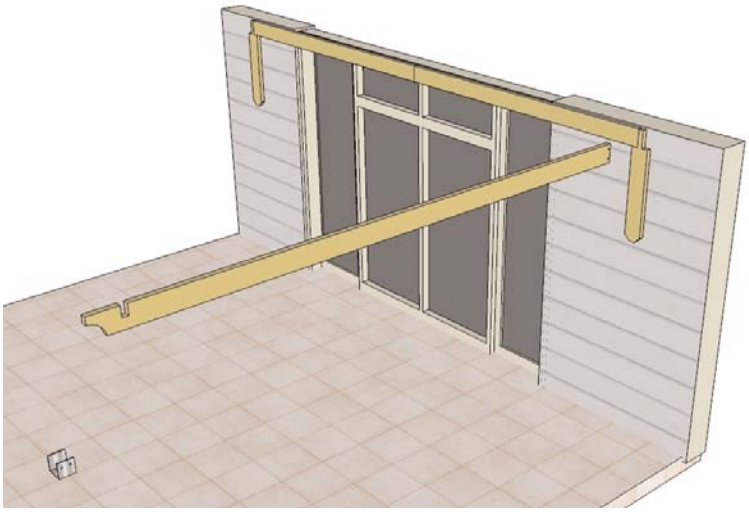

3. Lift and Place 1 **Side Girder (H)** up with Square cut end facing house and deep notch on opposite end facing up. Side Girder is 154 1/2” long.

4. With your helper carefully supporting the Side Girder from opposite end, place Washer on 1- 4” Lag Bolt and insert bolt through pre- drilled Side Girder and Wall Mount Bracket. (attach 2nd lag bolt in **Step 6.)** Carefully tap bolt into Wall Side Girder approx. 1/4” to get started and tighten with 9/16” wrench.
Important - if possible, try to pre-drill Wall Side Girder end to accommodate Lag Bolt.

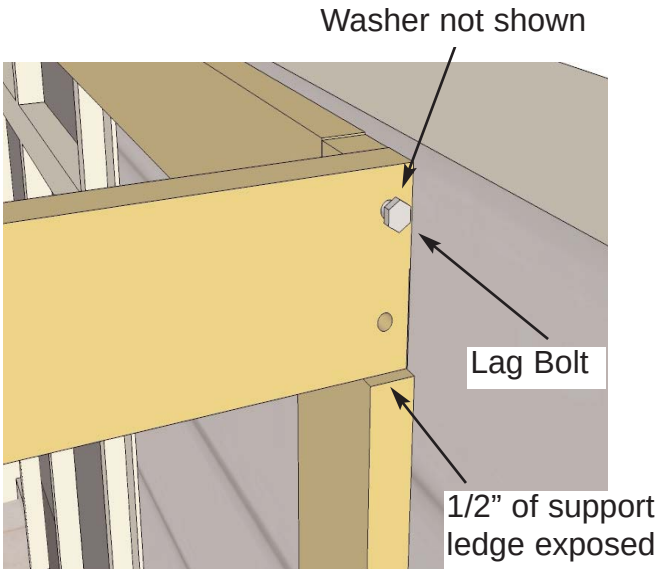

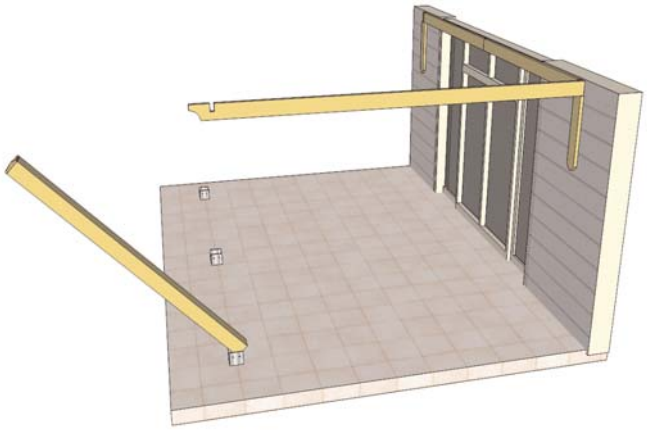

5. With Side Girder still being supported, lift and place your **Post (A)** in previously installed Post Mount and secure with appropriate hardware.

6. Attach Side Girder to Post with 2 - 3” Lag Bolts / Washers. Make sure Notch on Side Girder is flush to outside of Post.
Important- make sure you level Side Girder prior to attaching to Post. Go back to **Step 4** and complete attachment of 2nd Lag Bolt.

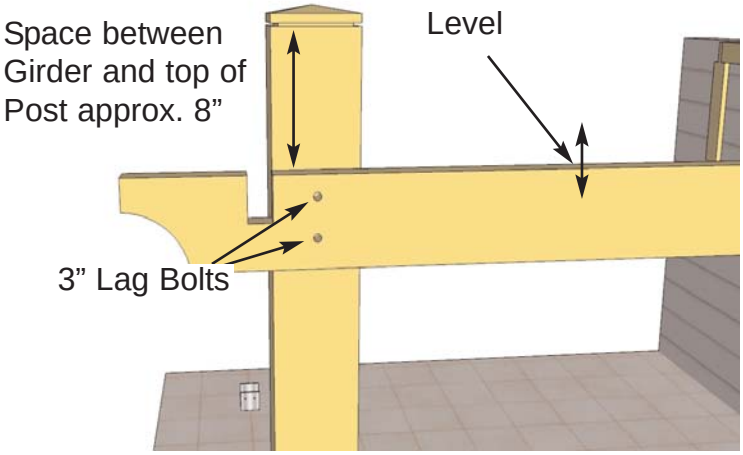

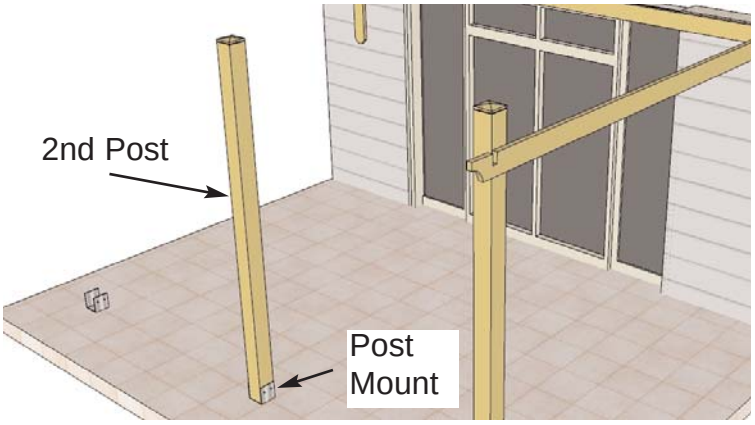

7. Lift and position your 2nd **Post (A)** into previously installed Post Mount and secure with appropriate hardware.

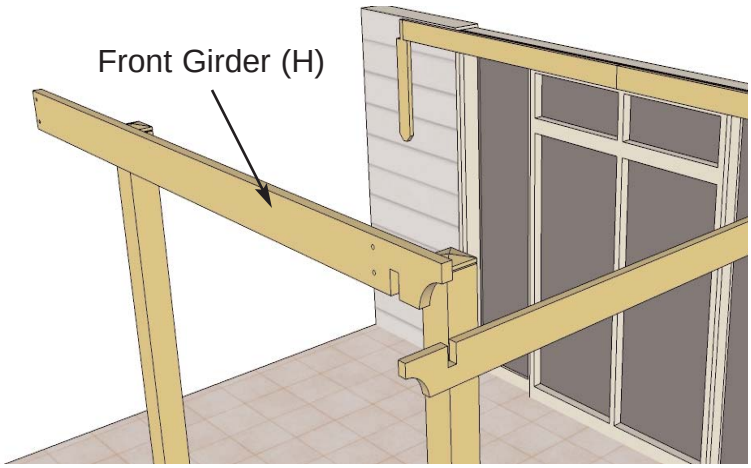

8. Locate 1 **Front Girder (E)** lifting up above Side Girder (H).

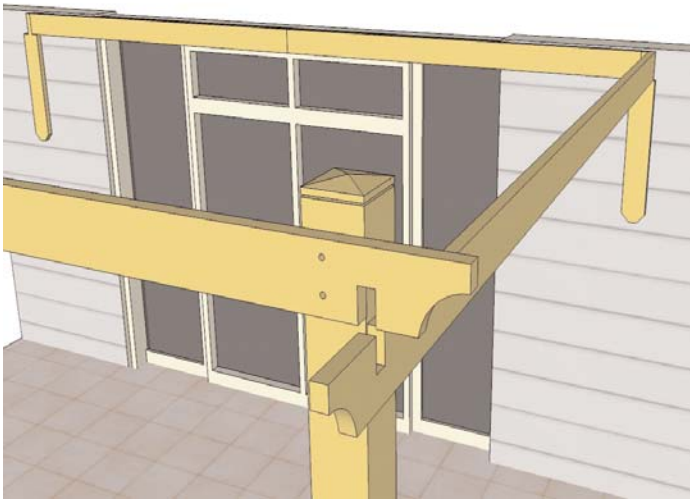

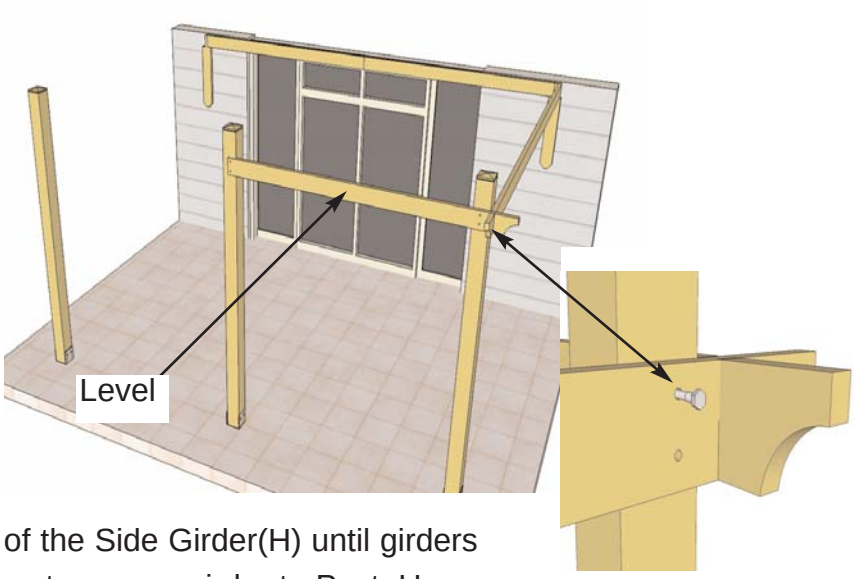

9. Slide the Front Girder (E) notch into the notch of the Side Girder(H) until girders sit flush with each other. Use 1 - 3” Lag Bolt/Washer to secure girder to Post. Use a level to align the Front Girder and mark on center post.

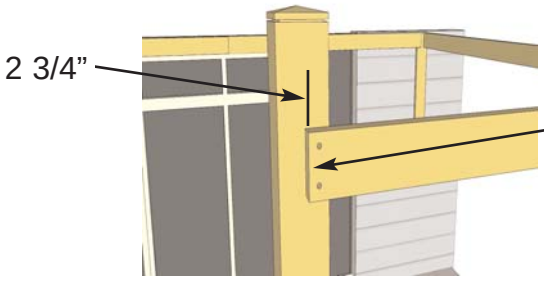

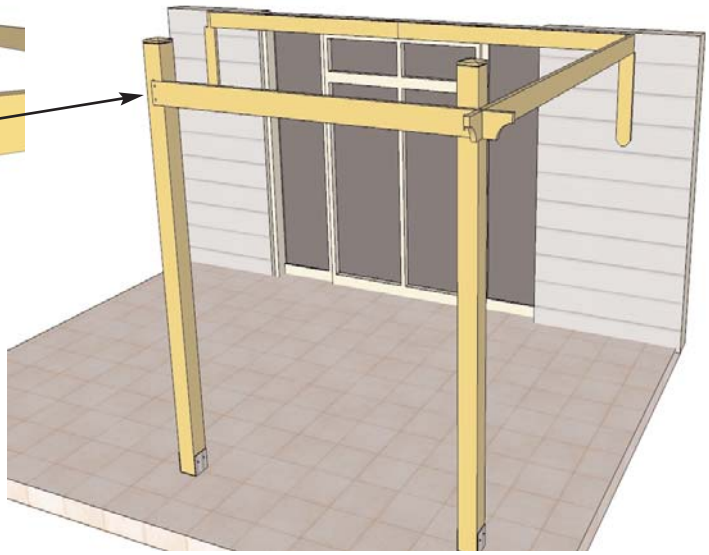

10. Attach the Front Girder (E) to Center Post using 2 - 3” Lag Bolts/ Washers. Once again, make sure girder is level prior to attaching. Make sure the Front Girder is centered on post (2 3/4”). When complete, go back to **Step 9** and finish Lag Bolting Front Girder to corner post.

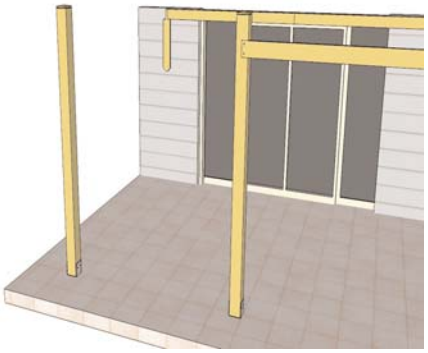

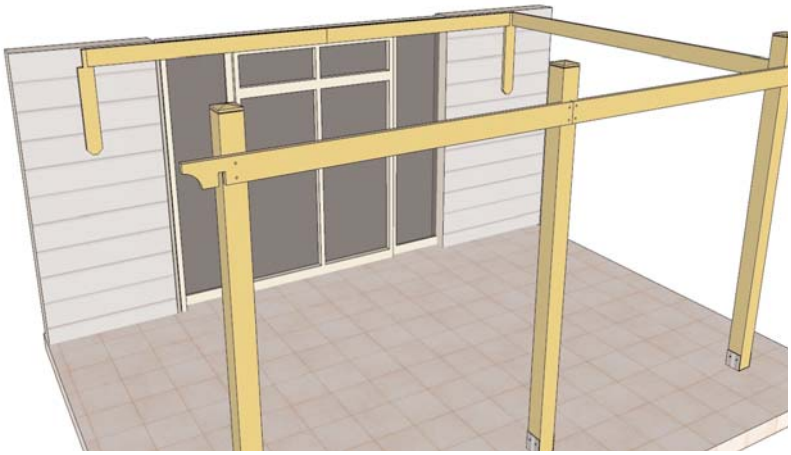

11. Position and secure the last **Post (A)** in previously installed Post Mount and secure with appropriate hardware. Lift and place the 2nd **Front Girder (E)** to post and level. Temporarily secure with girder to post with a 2 1/2” screw. **Important-** may have to adjust height of Front Girder and Side Girder in **Step 12**.

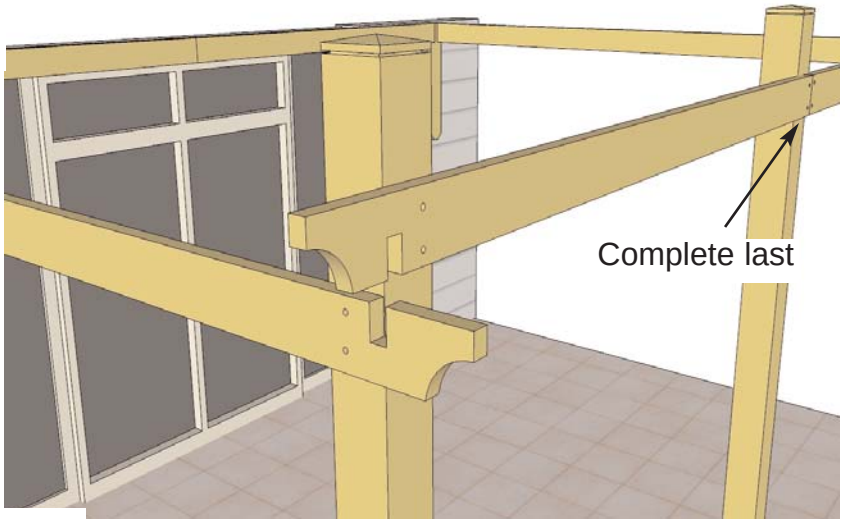

12. Lift and slide the last **Side Girder (H)** onto the Wall Mount (M) and on the opposite end into the notch of the Front Girder. Use a level to check for square of Side Girder, Front Girder and Post. Some adjustment may be necessary depending on the slope of your foundation. When level, attach Front and Side Girder to Post with 3” Lag Bolts/ Washers. Complete remaining Lag Bolt/Washer on Front Girder.

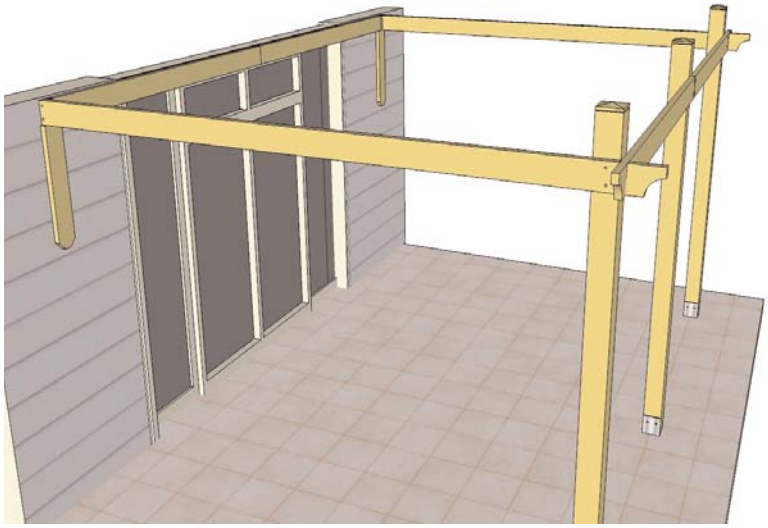

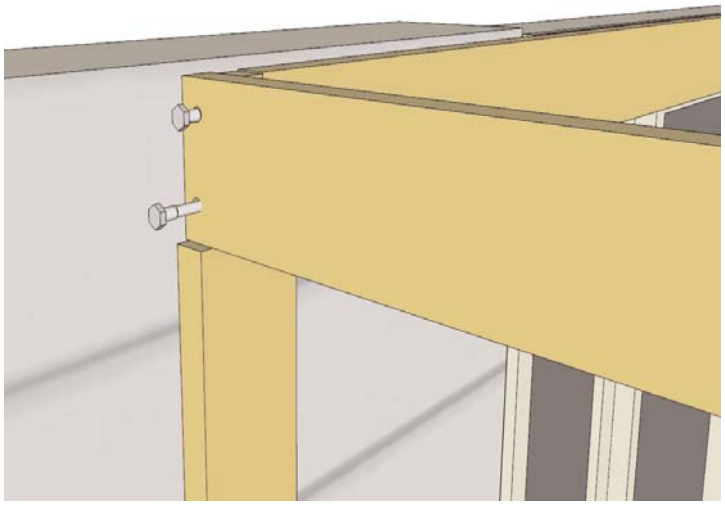

13. Finally, to complete all girder attachments, insert 2 - 4” Lag Bolts with washers through Side Girder (H) and Wall Mount Bracket (M). Once again tap bolt into Wall Side Girder (P) end and Tighten with 9/16” wrench.

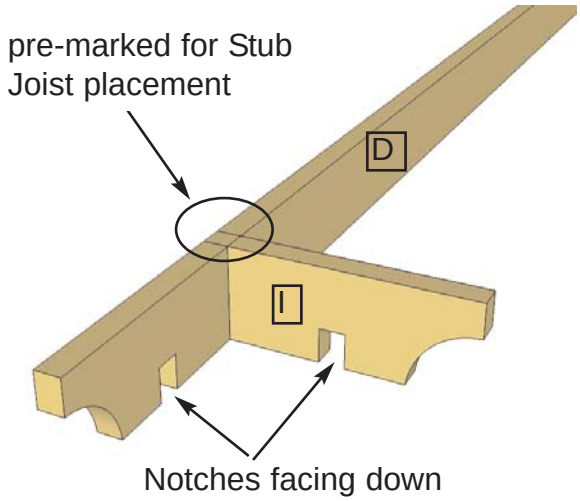

14. On level ground, position 1 **Main Joist (D)** and 10 **Stub Joists (I)**.
Main Joists are pre-marked for Stub Joist and Blocking position.

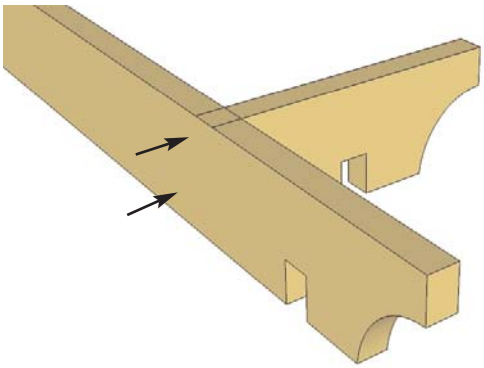

15. With Stub Joists positioned correctly on Joist, attach each Stub Joist with 2 - 2 1/2" screws. Stub Joists should be flush with top and bottom of Main Joist with all
notches facing down.

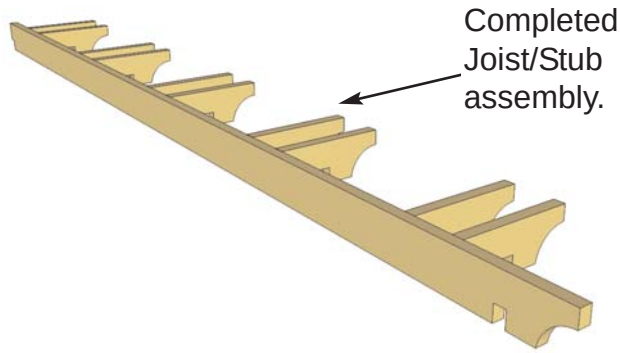

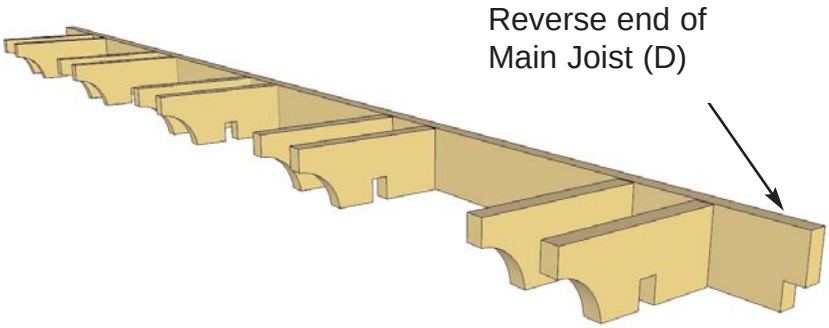

16. There are 2 Main Joist/ Stub Joist assemblies, complete both now.
Important- There is a left and right configuration. Stubs Joists are attached in the opposite direction as illustrated **Step 19.**

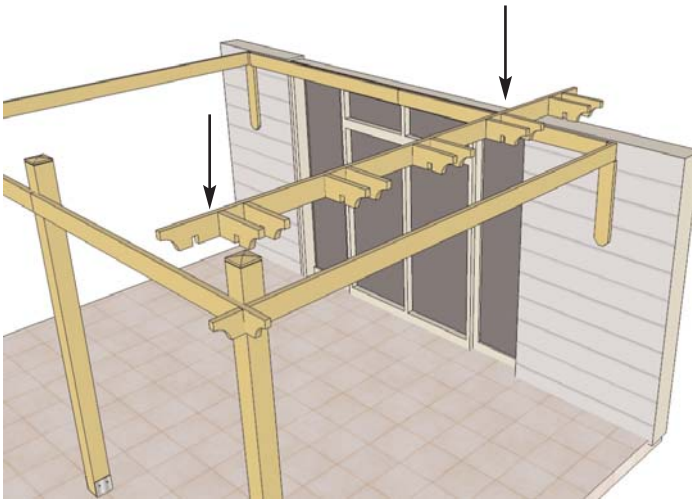

17. Carefully lift up completed Stub Joist / Main Joist assembly and place Main Joist between Front Girder (E) and Wall Side Girder(P). When correctly positioned, Main Joist will sit flush against post and notches of Stub Joist will sit down into Side Girder.

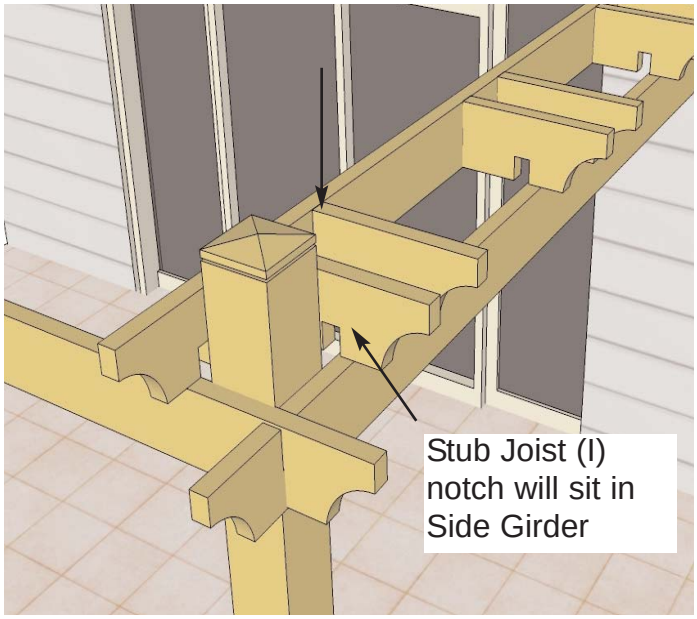

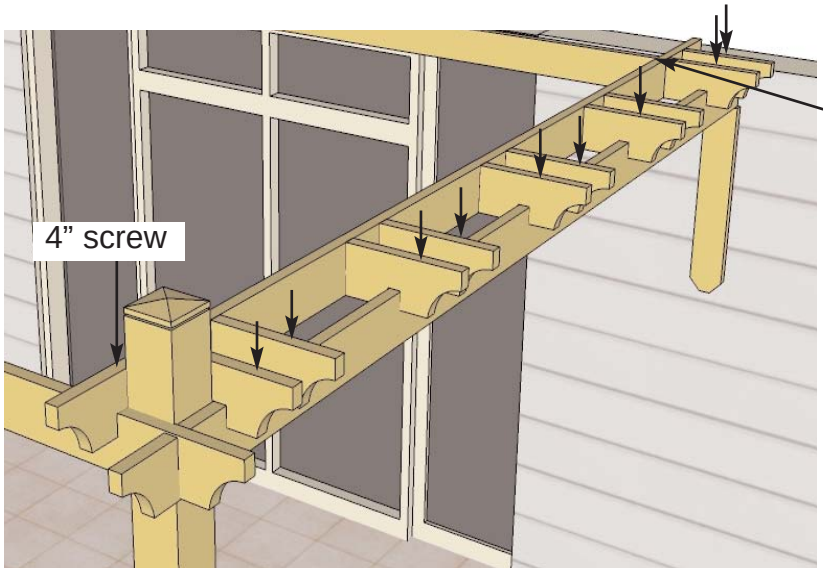

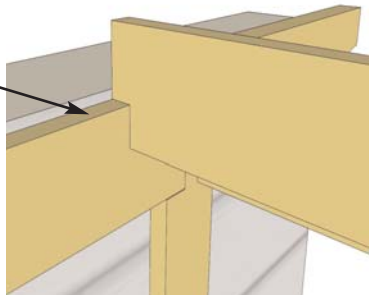

18. Attach all Stub Joists to Side Girder with 1- 4” screw per Stub Joist. Screw from the top down into girder. Where end of Main Joist sits on Wall Side Girder, a **Joist Mount Bracket (Q)** will be installed. See **Step 20** for installation of this hardware.

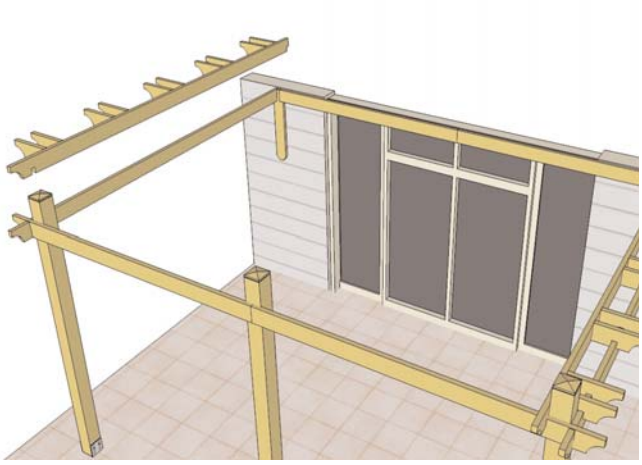

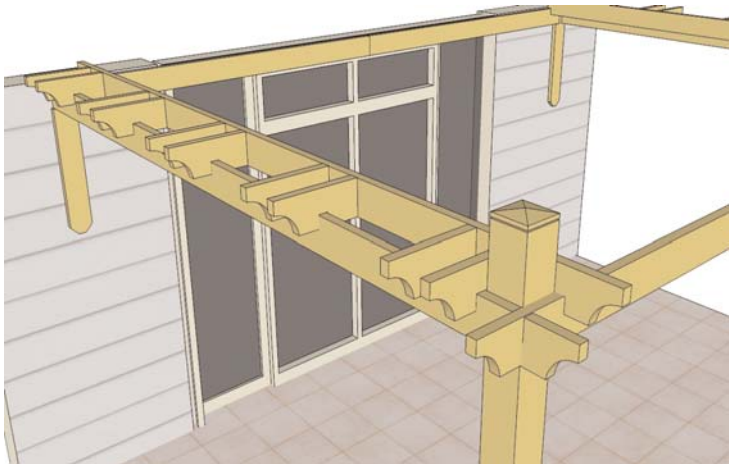

19. Lift and Place 2nd Stub Joist / Main Joist Assembly on other side of pergola. Follow same procedure as per **Steps 17-18.**

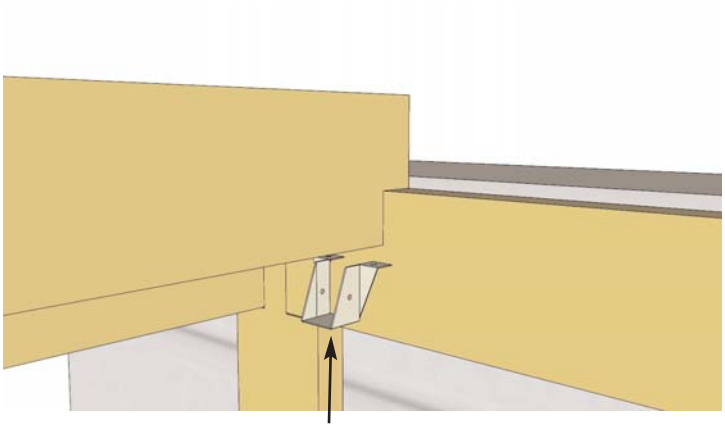

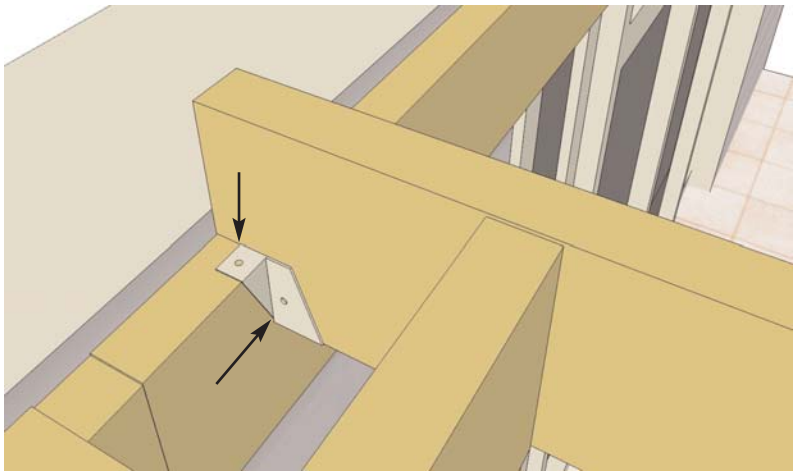

20. With Stub Joist / Main Joist Assembly positioned and partially attached. Complete by securing a Joist Mount Bracket. Start underneath and slide holder under the Main Joist and also so top flanges sit on Wall Side Girder. Attach with 4- 1 1/4” screws.

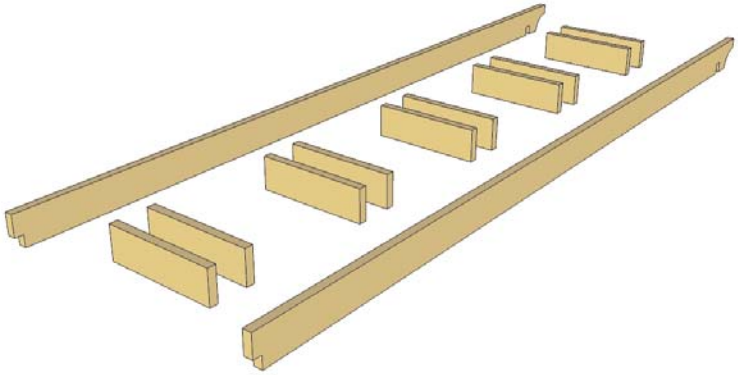

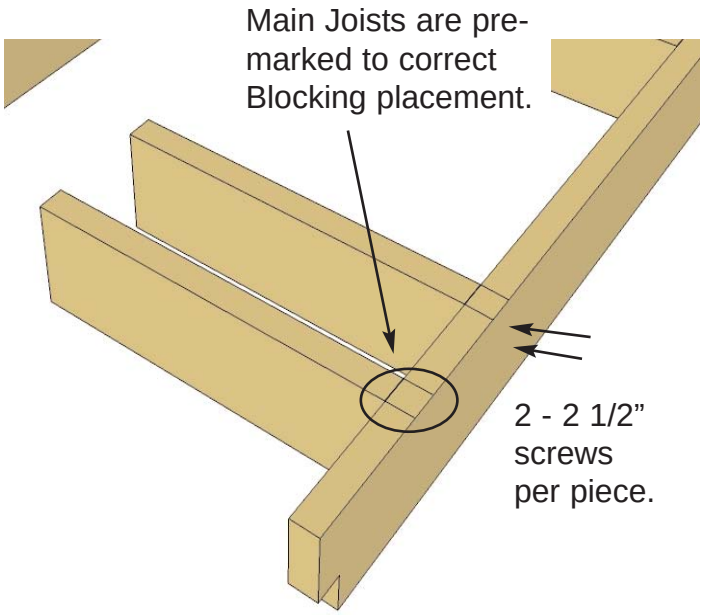

21. On a flat surface, position **Blocking (F)** where marked on Main Joist (D) and screw with 2- 2 1/2" screws per piece. Blocking should be flush with top and bottom of Main Joist with all notches facing down.

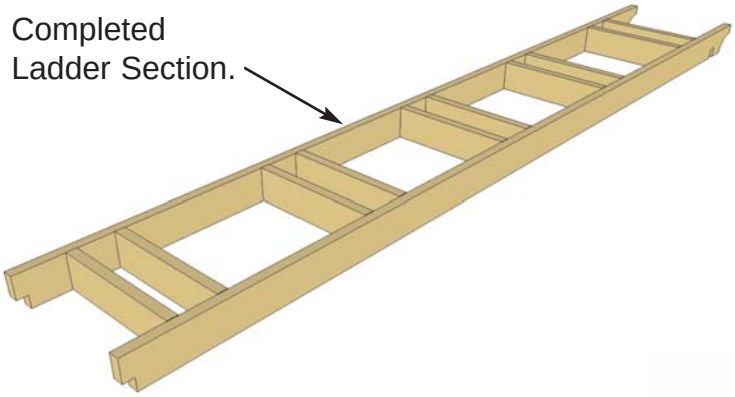

22. Complete all 6 Ladder Sections on the ground prior to moving to **Step 23.**

23. Carefully lift up one of the Ladder Sections and place between Front Girder and Wall Side Girder. You will require a helper to assist in lifting up the ladder section.

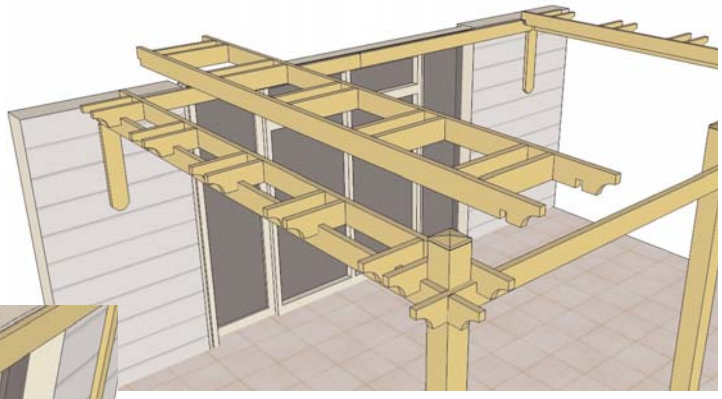

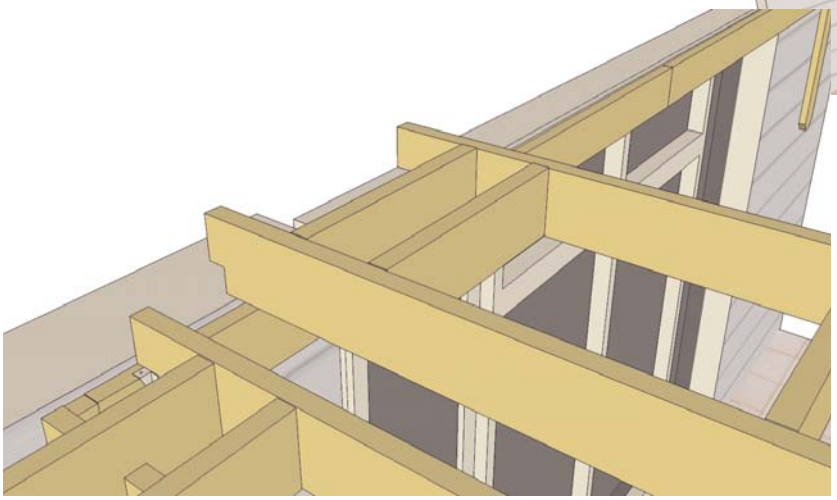

24. The notch of the Main Joist facing house will simply sit on the Wall Side Girder and will be attached later in **Step 29.**

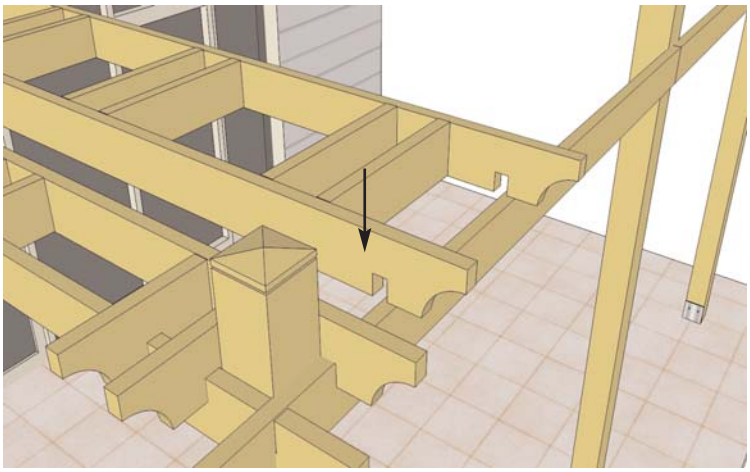

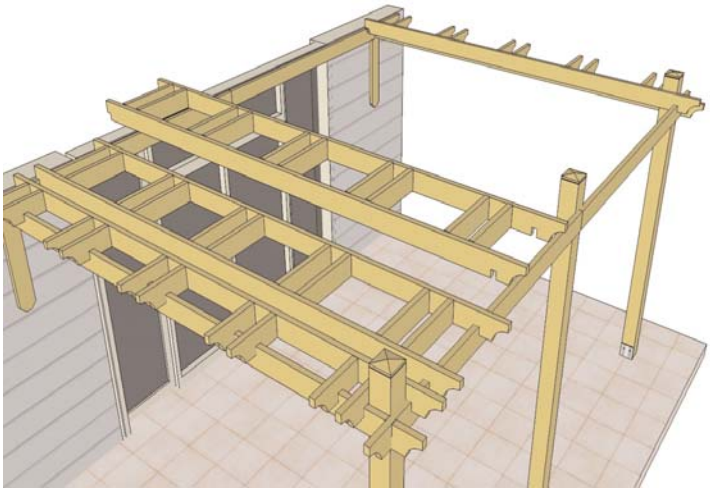

25. At the front, the notch of the Main Joist (D) will slip into the Front Side Girder (E). Space Ladder Section approximately 5 1/2” apart from adjacent Main Joist. Lift a 2nd Ladder Section up.

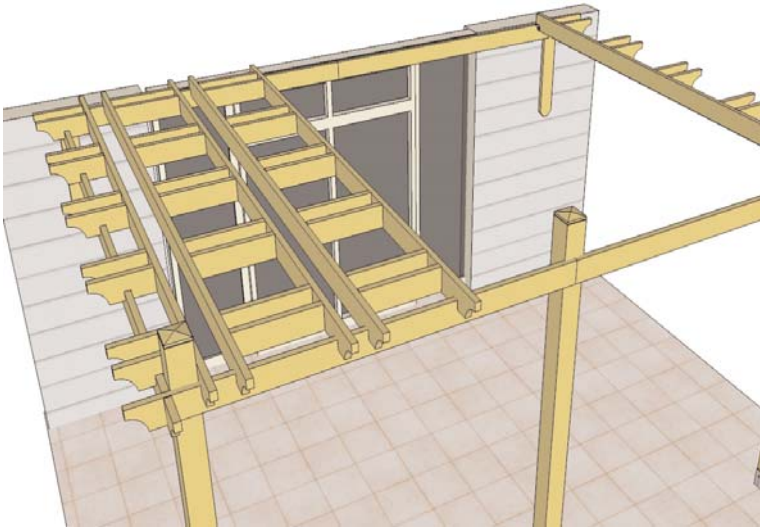

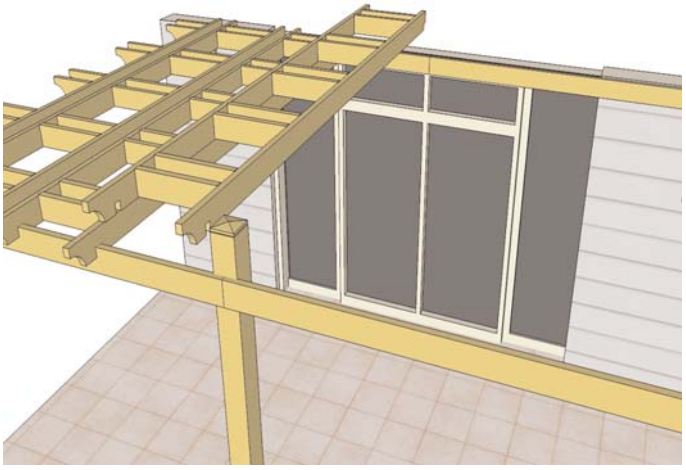

26. Place Ladder Section into position as per **Step 25**. On the 3rd Ladder Section, Main Joist should be positioned snug to center post.

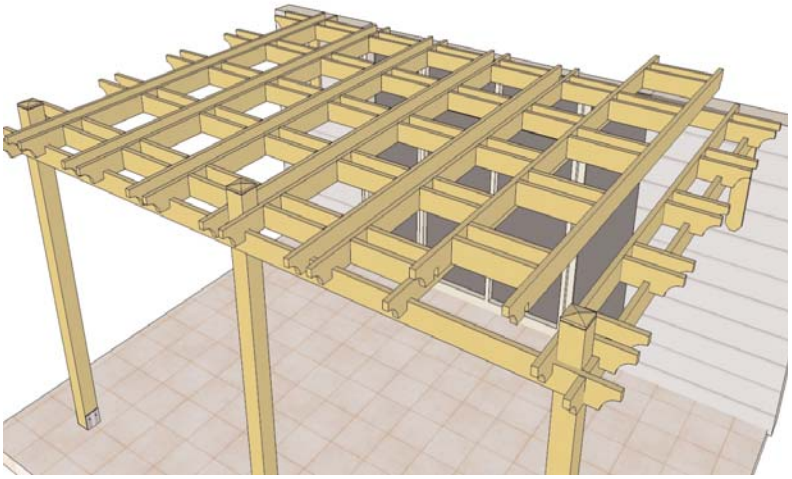

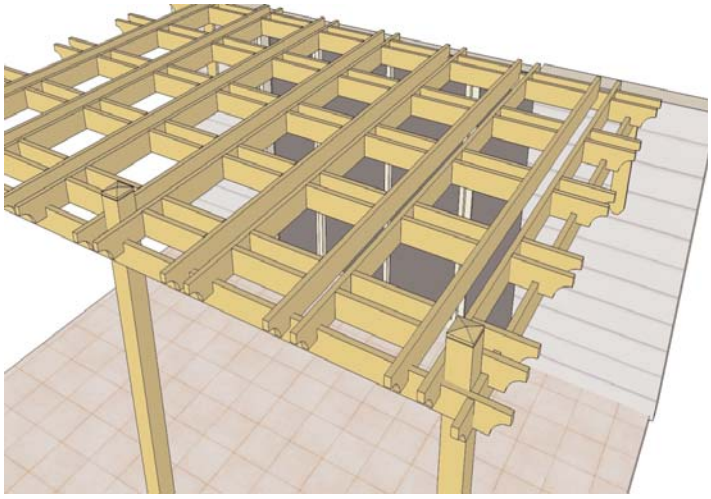

27. Lift and place final Ladder Section into position as per **Step 25.**

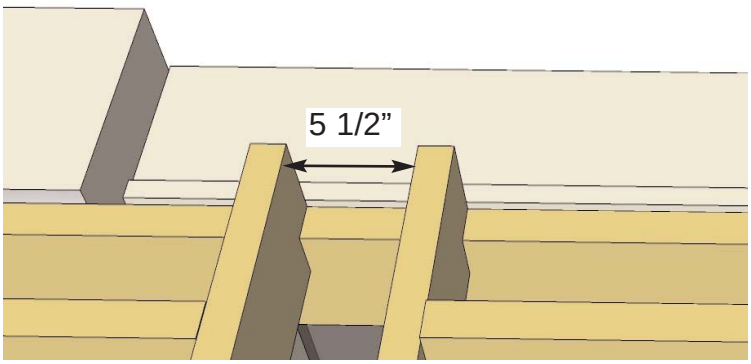

28. To complete Ladder Sections, first confirm Ladders are positioned correctly. Measure approximately 5 1/2” between each Ladder Section at both front and back of the pergola. **Important**- Ladder Sections may vary slightly, check for equal spacing before attaching. Remember to keep Joists tight against Posts (A).

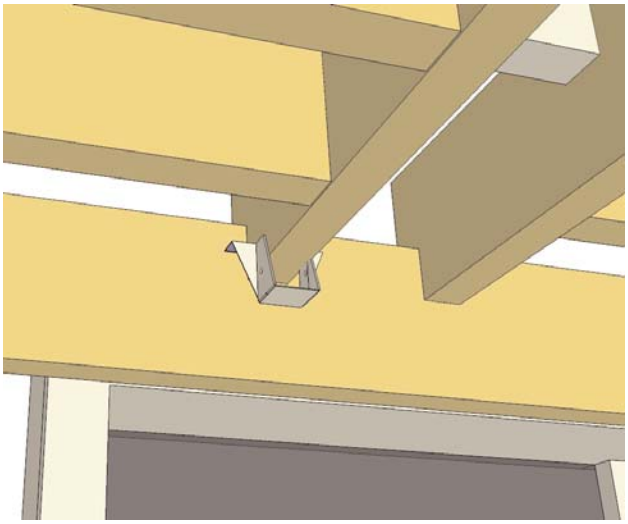

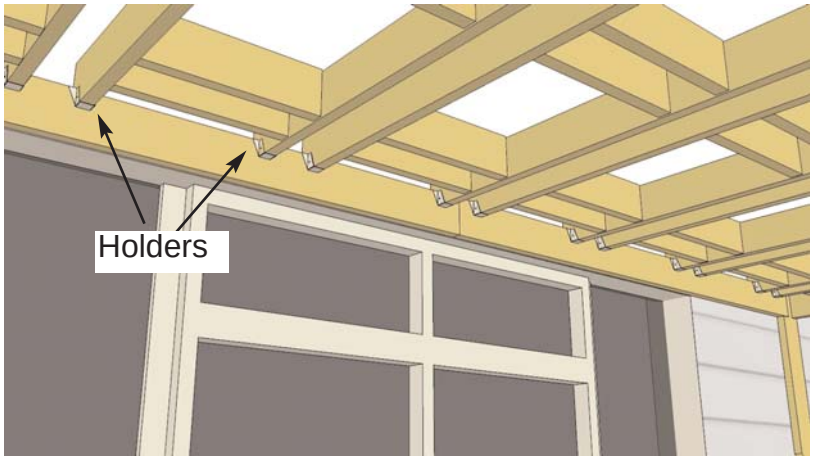

29. When comfortable with spacing, slide a Joist Mount Bracket under each Main Joist and attach as per **Step 20.**

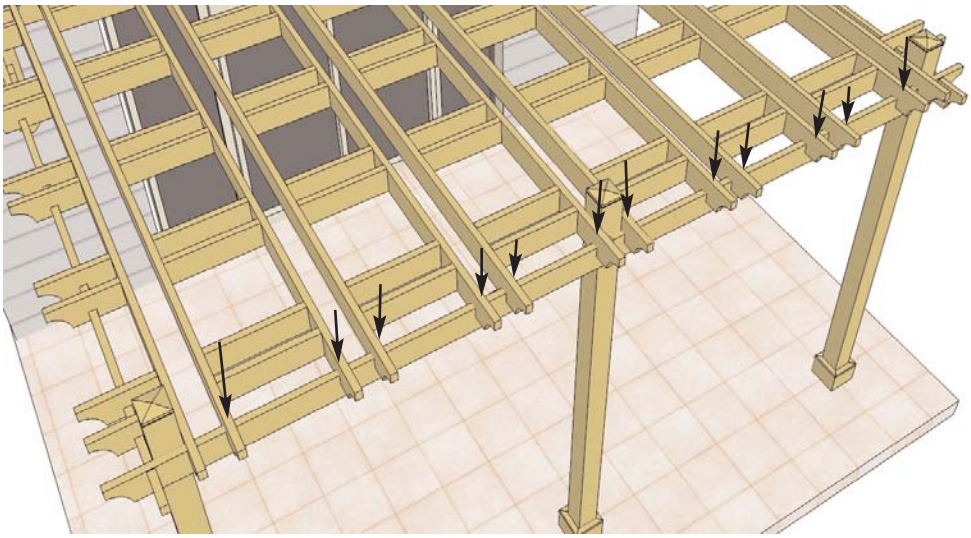

30. Attach the front of each Ladder Section to Front Girders (E) with 2 - 4” screw per Ladder. Screw from top down into girder.

31. There are 3 **Left** and 3 **Right Sided Corner Brackets (J) with Spacers. Corner Bracket Post Mounts (K)** must be attached to the bottom end of each Corner Bracket before attaching to Posts.

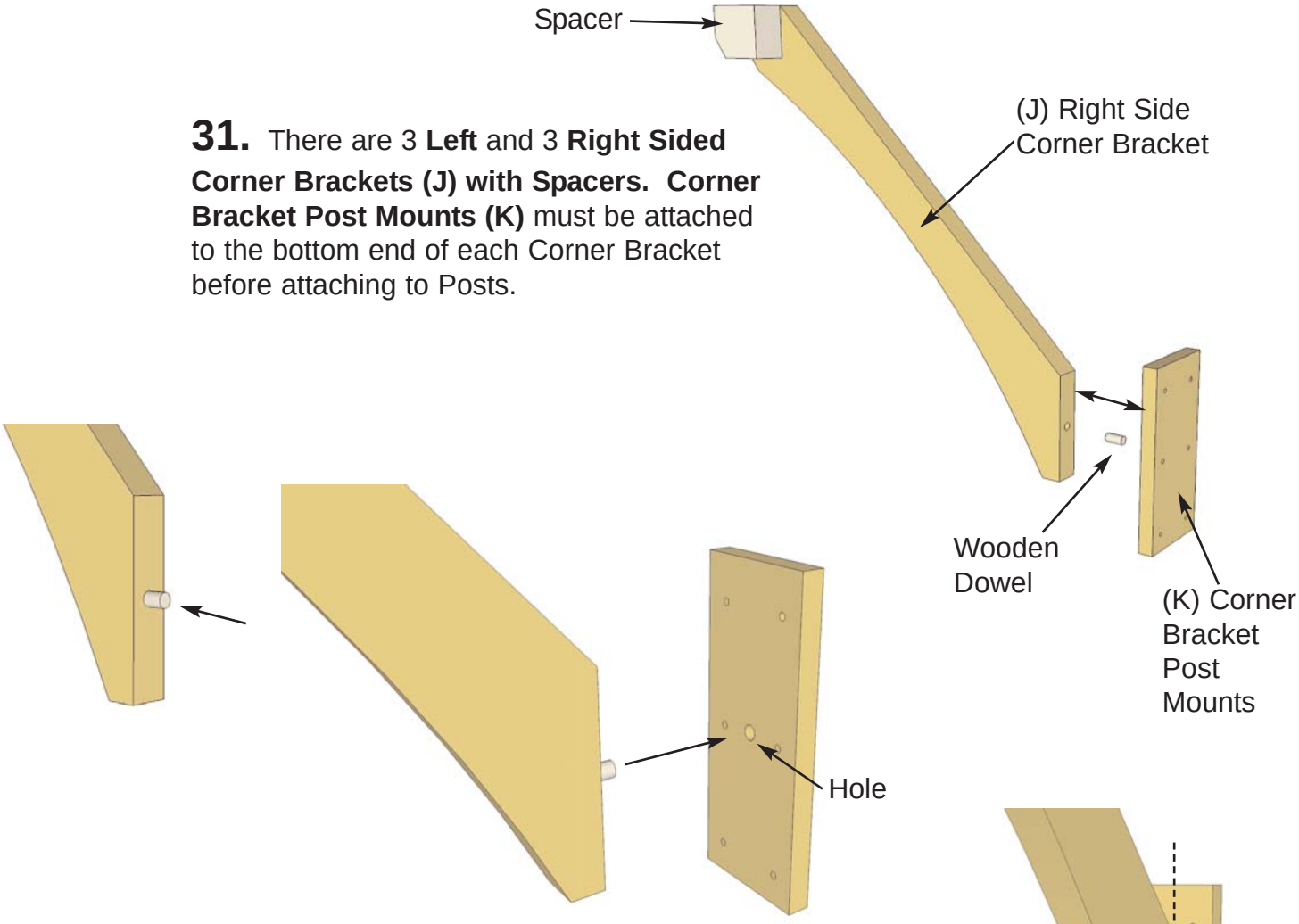

32. To assist you with Bracket and Post Mount alignment, both the end of the Bracket and Post Mount have been drilled for a **Wooden Dowel.** Wooden Dowels are found in the Hardware Kit Bag. Insert a Wooden Dowel in end of Corner Bracket first and then push Post Mount onto Dowel until Bracket and Post Mount are flush together. Align Post Mount parallel with Bracket.

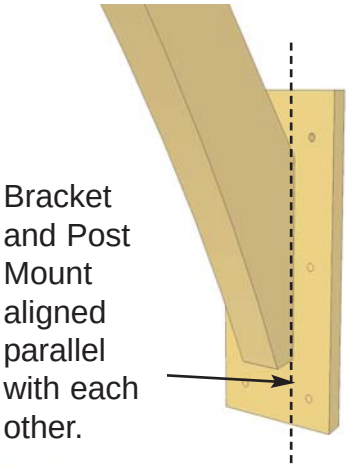

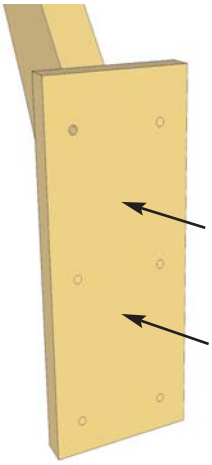

Important:- Drill pilot holes to prevent wood from splitting.

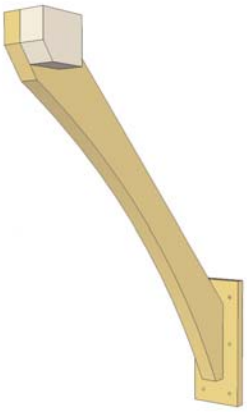

33. With Bracket and Post Mount correctly aligned, screw Post Mount to Bracket with 2 - 2 1/2" screws. **Important- Drill pilot holes in Post Mounts and Bracket to prevent wood from splitting!** Complete all remaining Brackets/Post Mount connections.

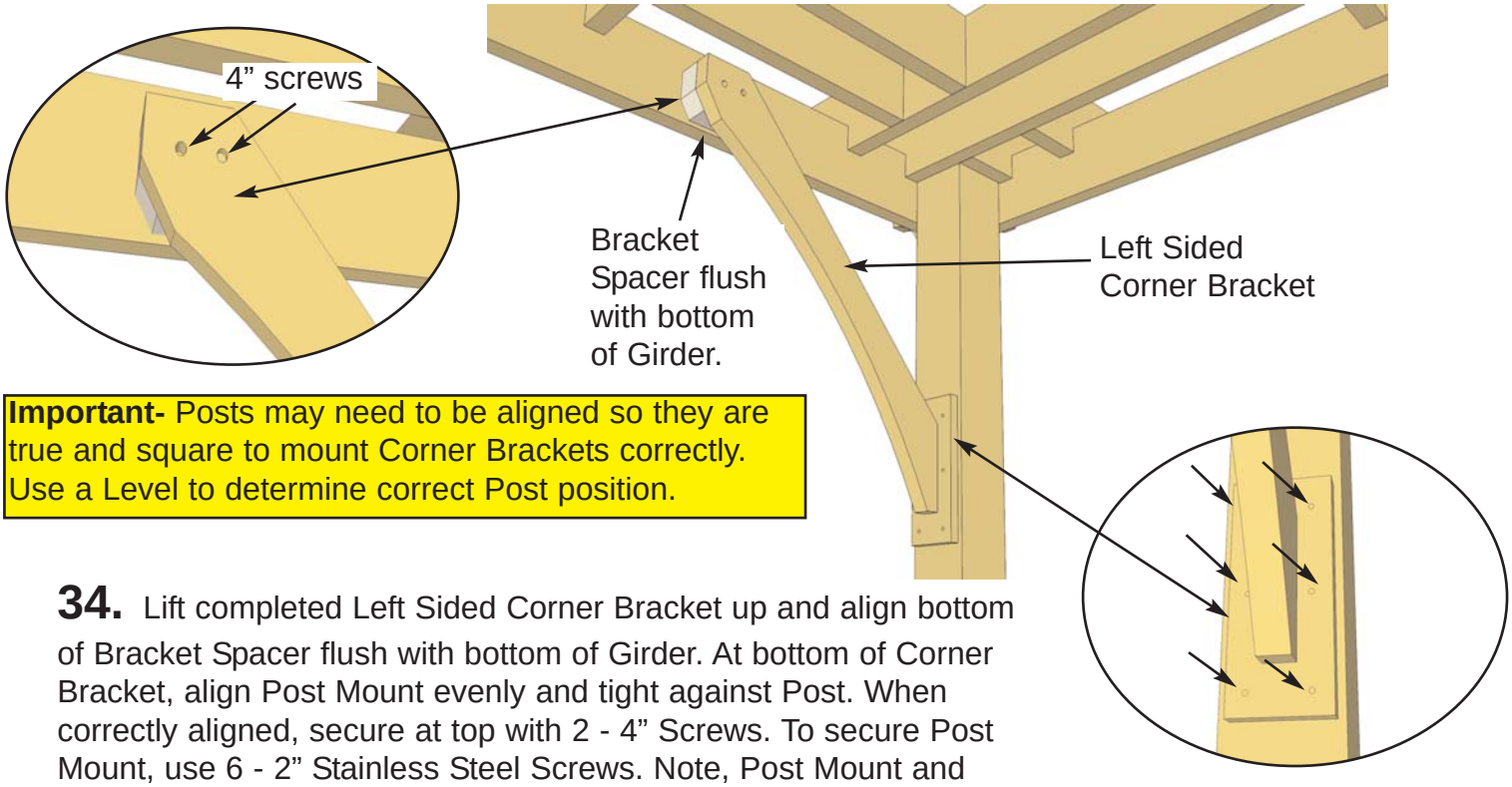

Important- Posts may need to be aligned so they are true and square to mount Corner Brackets correctly. Use a Level to determine correct Post position.

34. Lift completed Left Sided Corner Bracket up and align bottom of Bracket Spacer flush with bottom of Girder. At bottom of Corner Bracket, align Post Mount evenly and tight against Post. When correctly aligned, secure at top with 2 - 4” Screws. To secure Post Mount, use 6 - 2” Stainless Steel Screws. Note, Post Mount and Top of Bracket are pre-drilled.

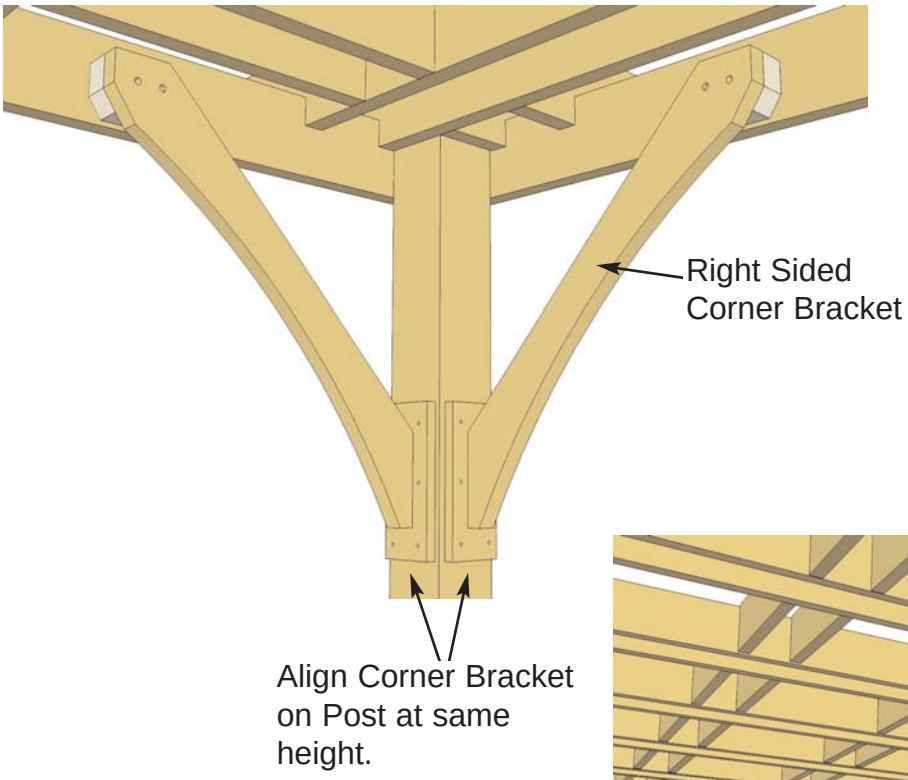

35. Align and attach a Right Sided Corner Bracket on Post as per **Step 34.** Make sure both Brackets are aligned on Post at the same height before attaching.

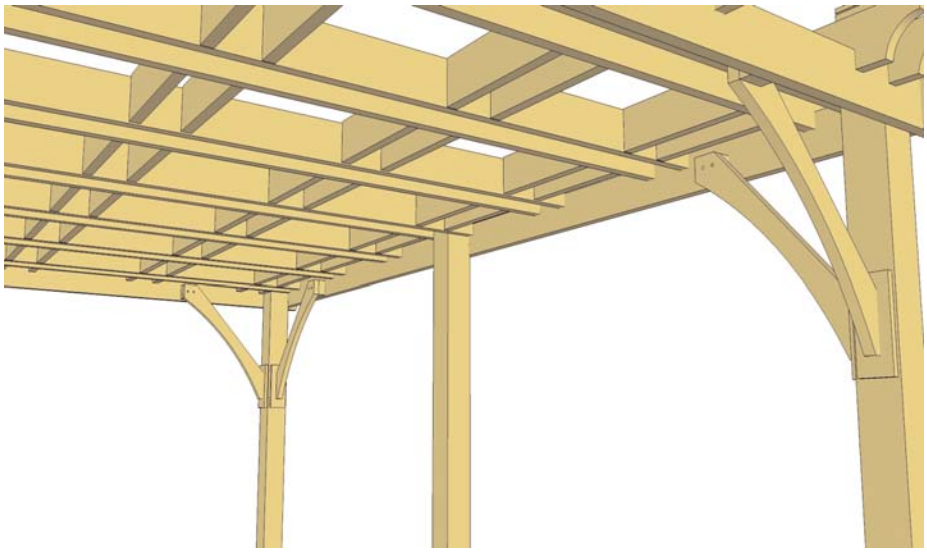

35. Complete remaining Outside Corner Left and Right Sided Corner Bracket attachments.

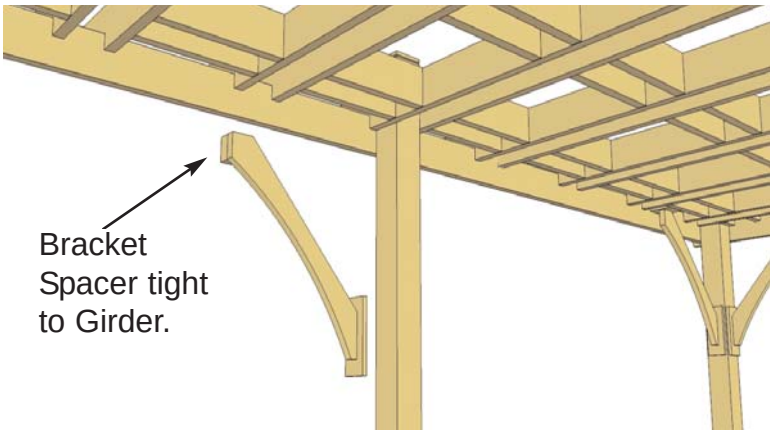

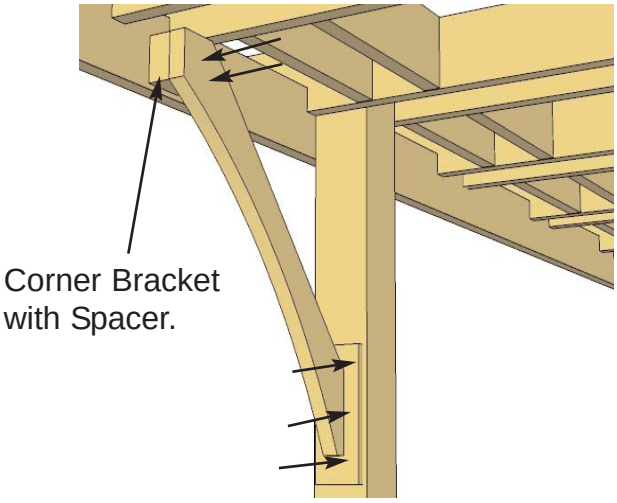

36. Complete remaining Outside Corner Left and Right Sided Corner Bracket attachments.

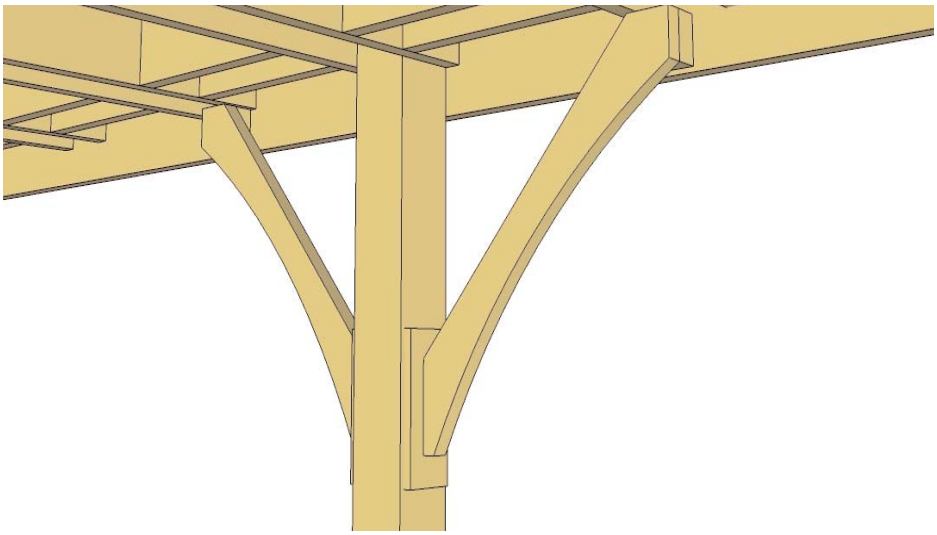

37. Complete both the left and right side Center Post Corner Brackets on each post. Once again, make sure both brackets are centered on post and are the same height as the outside corner brackets.

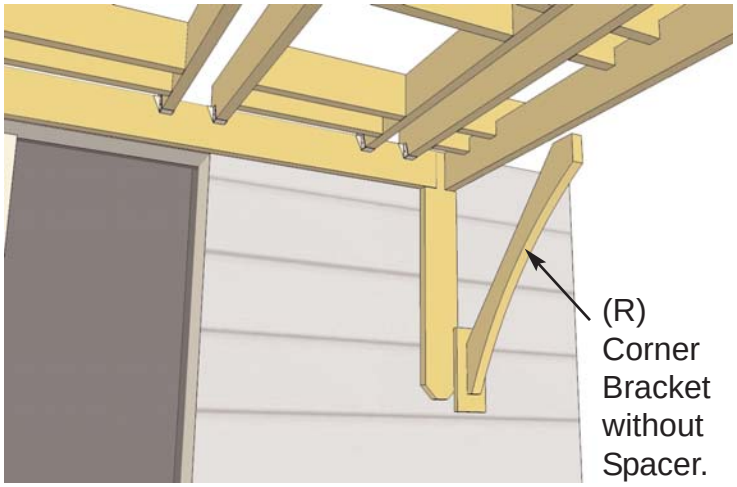

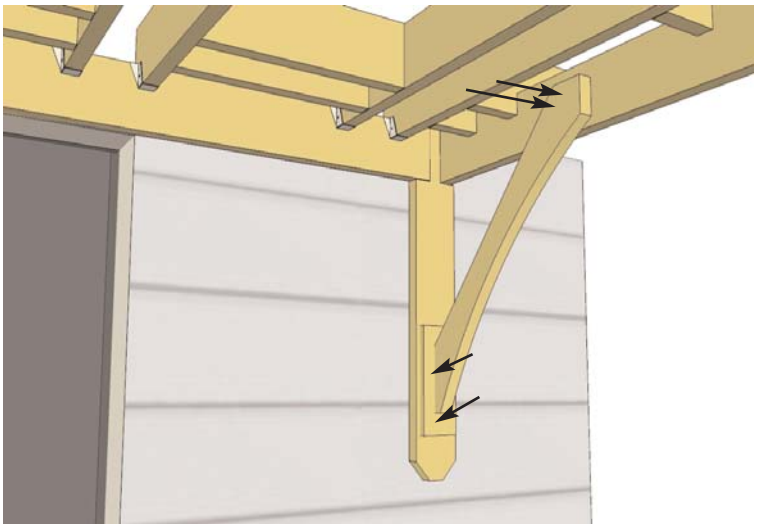

38. Lift and position the last 2 remaining Corner Brackets (without Spacers) centered on the Wall Mount Brackets (M) and at the top flush against the Side Girders (H). Attach the upper bracket to the Side Girder from the inside with 2 - 2 1/2” screws. Attach the Post Mount to the Wall Mount Bracket with 6 - 2” screws. Complete the other side to complete your attached Breeze.

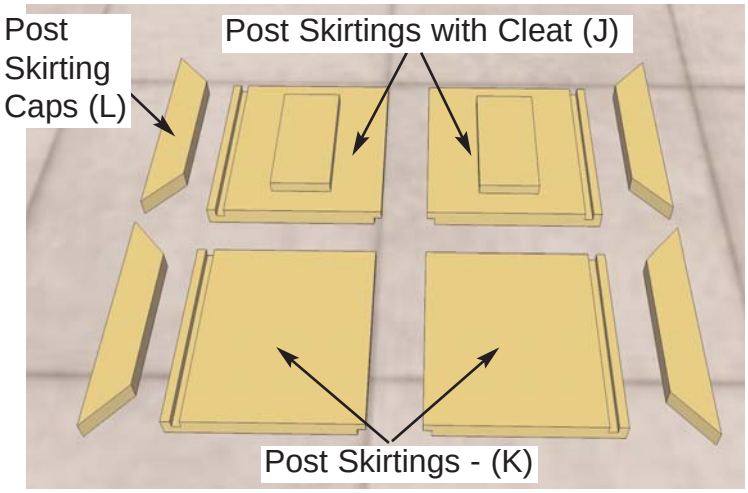

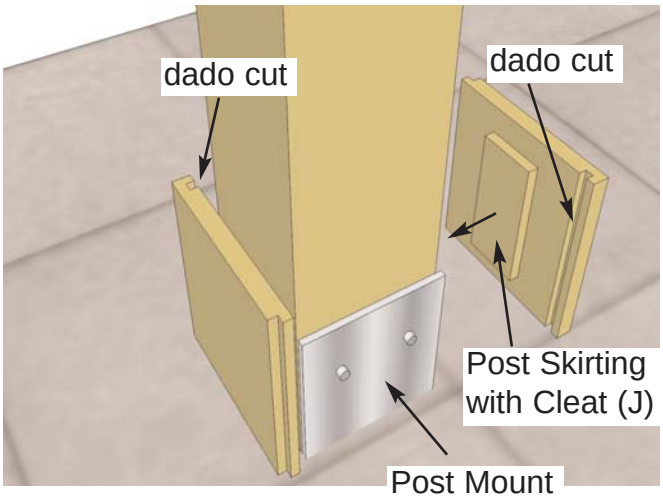

24. To complete your Breeze, position 2 **Post Skirtings with Cleats (J)** on opposite sides of Post with Dado cuts facing to the inside as shown above. Cleat should be aligned tight against Post and not against Post Mount Hardware.

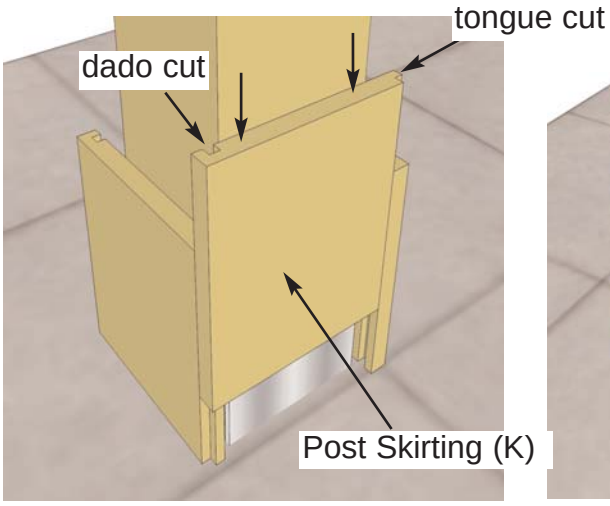

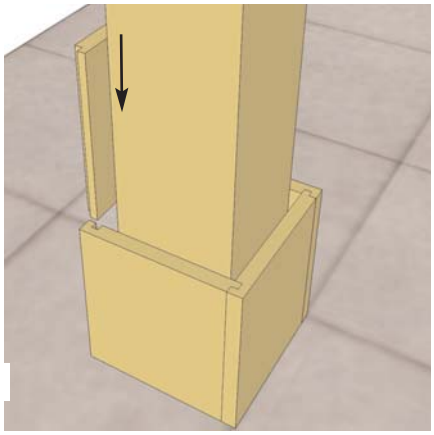

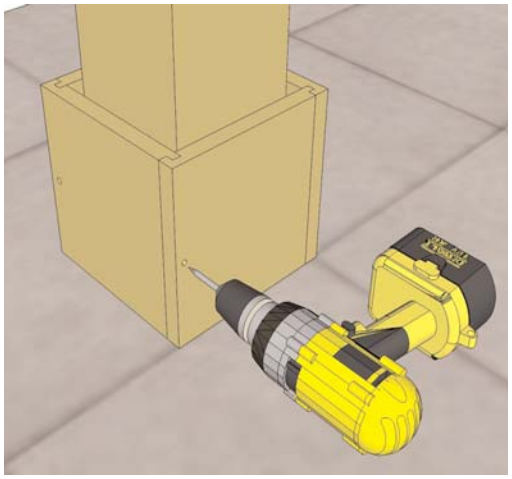

25. Slide the tongue and dado cuts of both **Post Skirtings (K) Pieces** into the ajoining tongue and dado cuts of **Part J.** Align all skirting pieces evenly at top. Carefully secure Post Skirtings together with with 1 - 1 1/4" screw per dado cut side. (1 per side).
Important - Drill 1/8" pilot hole first to prevent wood from splitting!

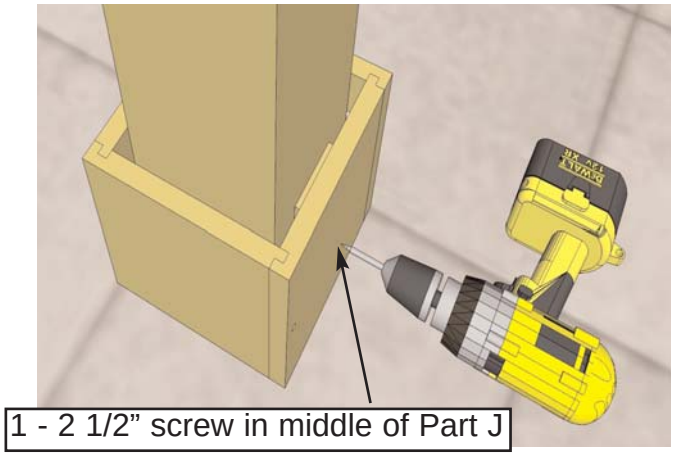

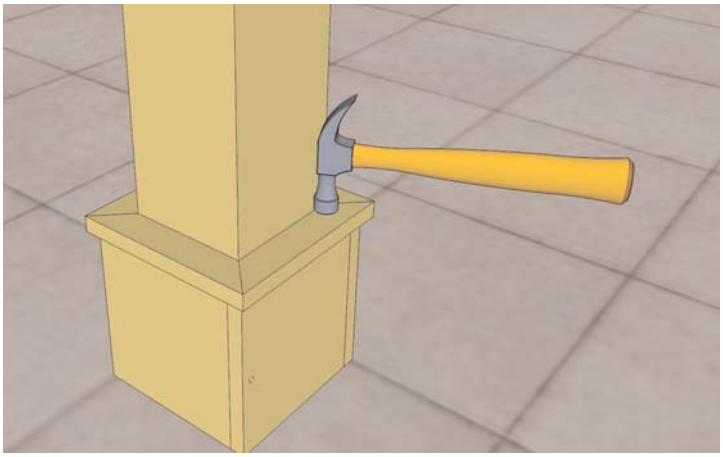

26. Secure Skirting Unit to Post by screwing 1 - 2 1/2" screw into each Post Skirting with Cleat (J). Align **Post Skirting Caps (L)** tight against Post and equally from side to side of skirting frame. Nail Cap down into Skirting with 3 - 1 1/4" finishing nails per piece. Complete remaining Post Skirtings.

12x16 Attached Breeze

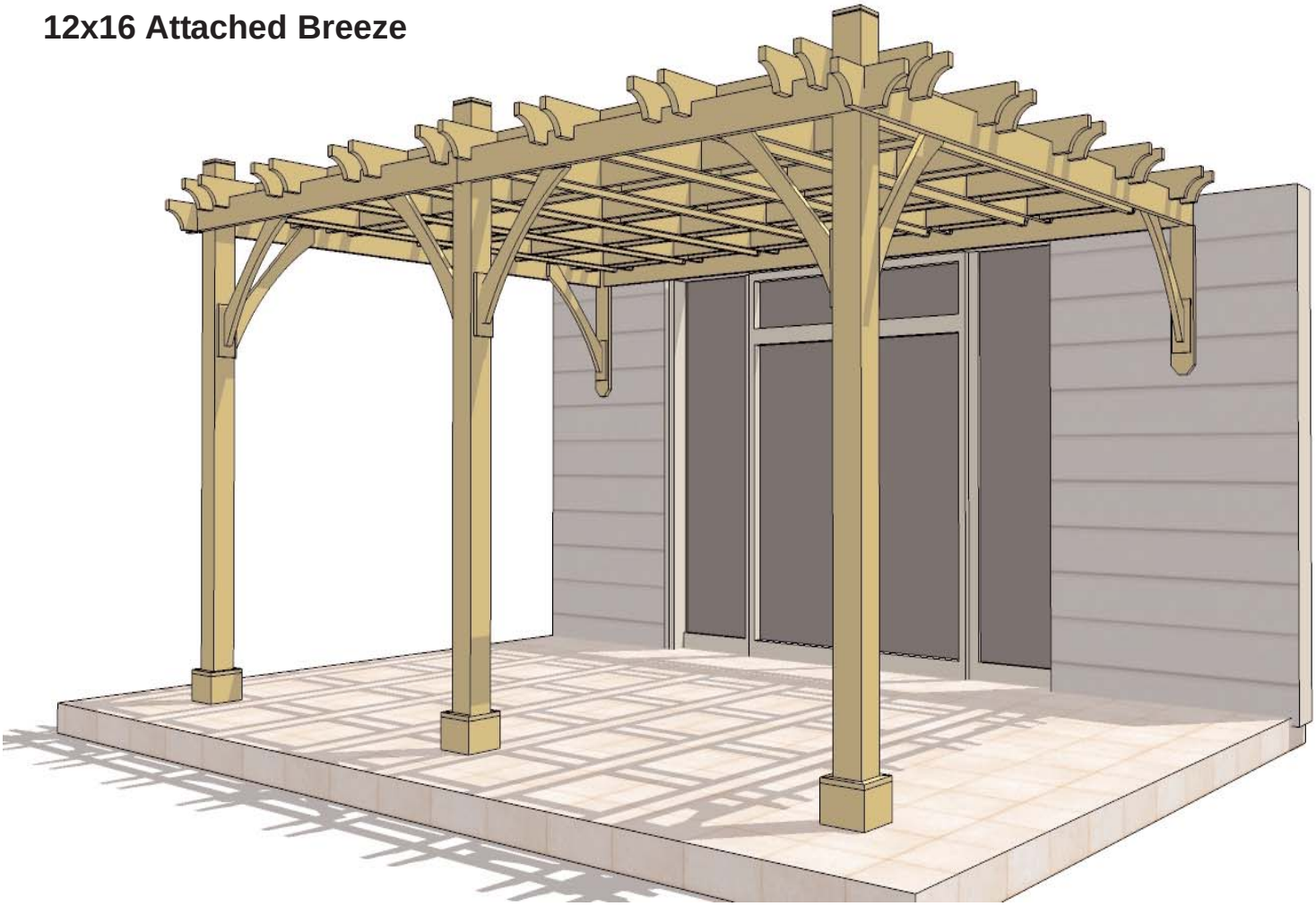

Congratulations and thanks for purchasing a Breeze Pergola!

Note; The Breeze Pergola is an unfinished product. If exposed to the elements, the western red cedar lumber will weather to a silvery-gray color. If you prefer to keep the cedar lumber looking closer to the original color, we suggest that you treat the wood with a good oil base wood stain. You may also wish to paint your new Pergola rather then stain it. In both cases we recommend that you consult with your local paint and stain dealer in your local area for their recommendations.

If you have any questions, comments or suggestions about the Breeze Pergola, please contact our customer support line @ 1-888-658-1658 or email us at service@outdoorlivingtoday.com.
Thanks again!

Customers agree to hold Outdoor Living Today and any Authorized Dealers free of any liability for improper installation, maintenance and repair of any Outdoor Living Today products.